GOVERNMENT OF DUBAI

هيئة كهرباء ومياه دبي
Dubai Electricity & Water Authority

SHAMS DUBAI

CHECKLIST
TESTING AND INSPECTION WITHOUT INTERCONNECTION

VERSION 1.0 AUGUST 2015

TABLE OF CONTENTS

1 SCOPE 5
1.1 PV PLANT AND INSPECTION DATA 6

2 TESTING EQUIPMENT 7

3 DOCUMENTS 8
3.1 Reference documents and standards 8
3.2 PV plant design documents (Technical dossier) 8

4 TESTS AND INSPECTIONS WITHOUT INTERCONNECTION TO THE NETWORK 9
4.1 Mechanical inspections and Tests 9
4.1.1 PV plant General Assessment 9
4.1.2 Civil Works 10
4.1.3 Support Structures 11
4.1.4 Photovoltaic Modules 12
4.2 Inspections without interconnection 13
4.2.2 Protection of Assembled Components (IP degree) 14
4.2.3 String Combiner Boxes (DC string connections and AC auxiliary services) 15
4.2.4 Electrical Power Connections in Substations and Electrical Rooms 16
4.2.5 Bonding and Earthing System 17
4.2.6 Connections to earthing system of metal structures / equipment 18
4.3 Tests without interconnection 19
4.3.1 Insulation of LV connections DC and AC 19
4.3.2 Measurements on PV strings 20
4.3.3 Calibration of protections (Interface Protection) 21

ANNEX 1 – INSULATION TESTS 22

ANNEX 2 – TESTS ON PV STRINGS 23
PV string open circuit voltage measurements 23
PV string short-circuit current measurements 23
Test insulation between earth and short-circuited strings 23
Report of detailed test results 24

1 SCOPE

This document reports the results of the Mechanical Completion inspection.

The inspection consists of visual checks and of the measurement of selected electrical characteristics. Most checks are required with reference to 100% of the installation, some checks and measures with reference to a minimum percentage of 15% of the installation.

At completion of the test, a Test report shall be prepared.

Participants shall take note of inspection checks and measures for their own record. The test engineer of the Applicant / Contractor shall prepare the draft Test Report that will be distributed to the participants for comments and approval.

The present Mechanical Completion inspection is related to testing without interconnection, a further on-site testing phase shall be carried out in the frame of the Final Inspection: the Mechanical Completion test report will be thus become part of the Final Inspection Report.

The checks to be performed in the Mechanical Completion inspection are described in the following paragraphs.

The testing instruments shall be provided by the Applicant / Contractor and have valid calibration certificates in order that valid on-site testing measures can be performed.

1.1 PV PLANT AND INSPECTION DATA

Name of the PV Plant	Nominal Power (kW)			Location of the Plant	
Type of installation	Rooftop	Flat rooftop	Ground	Pole	BIPV
Date of the inspection					

Name of Test Engineer [1]	Affiliation	Licence / Register ID
	Consultant	

TESTING AND INSPECTION WITHOUT INTERCONNECTION RESULT	**PASSED**
	REJECTED

Participant	Affiliation	Role
	Consultant	Designer
	Consultant	Test engineer
	Contractor	Installer
	DEWA	Inspector

1 Tests are to be carried out by a licensed engineer

2 TESTING EQUIPMENT

Test equipment						
Type of measure		Manufacturer	Model	SN	Calibration Certificate	Date of last calibration
1	**DC power**					
	Wattmeter					
	DC clamp meter					
2	**PV installation test equipment (*)**					
	VOC, ISC, insulation resistance (see Sect. 4.2.2)					
3	**Solar radiation**					
	Reference cell					
4	**Cell temperature**					
	Thermocouple / PT100					
5	**Checks on PV strings**					
	Inclinometer					
	Digital multimeter					
	Clamp Digital multimeter					
	Insulation resistance and continuity (Megger or equivalent instrument)					

(*) It is recommended the use of equipment that can perform measurements in accordance to IEC 62446 (e.g. Seward PV150, HT-Instruments PVCHECK, Gossen Metrawatt PROFITEST, Benning PV 1-1).

3 DOCUMENTS

3.1 Reference documents and standards

[1] DEWA Standards for Distributed Renewable Resources Generators Connected to the Distribution Network

[2] DEWA Connection Guidelines for Distributed Renewable Resources Generators Connected to the Distribution Network

[3] DEWA Inspection and Testing Guideline for Distributed Renewable Resources Generators Connected to the Distribution Network

3.2 PV plant design documents (Technical dossier)

A list of documents provided by the Applicant to DEWA will be filled as in the proposed template here below.

Data-sheets and catalogues

[1]	
[2]	
[3]	
....	

Technical Reports

[1]	
[2]	
[3]	
....	

Drawings

[1]	
[2]	
[3]	
....	

4 TESTS AND INSPECTIONS WITHOUT INTERCONNECTION TO THE NETWORK

4.1 Mechanical inspections and Tests

4.1.1 PV plant General Assessment

With reference to 100% of the installation, verify the correspondence to the drawings and design documents regarding the quantity, type, sizing, installation and integrity of components and materials. The following checks shall be performed.

General assessment of RRGU / RRGP									
		Doc. ref.	Result						Ref. to Note
1	Configuration of PV plant, separation subfields, verification of string layout on support frames		OK	☐	NO	☐	N/A	☐	
2	Orientation of the PV field: within the range of tolerances set out in the project design		OK	☐	NO	☐	N/A	☐	
3	Check the total number of modules		OK	☐	NO	☐	N/A	☐	
Following the verification of the number of modules installed, the total power is equal to: xxx.xx kWp									
4	Positioning of the structures		OK	☐	NO	☐	N/A	☐	
5	Number and position of the cabins		OK	☐	NO	☐	N/A	☐	
6	Position of main cable ways		OK	☐	NO	☐	N/A	☐	
7	Safe access to the rooftop and Exit plan		OK	☐	NO	☐	N/A	☐	
8	Condition of the internal roads		OK	☐	NO	☐	N/A	☐	
9	Drainage works and / or rainwater drainage		OK	☐	NO	☐	N/A	☐	
10	Cleanliness of the modules		OK	☐	NO	☐	N/A	☐	
11	Barriers and fences (path, type) and segregation of hazardous areas		OK	☐	NO	☐	N/A	☐	
12	Availability of warning signs (e.g. “WARNING DUAL SUPPLY”)		OK	☐	NO	☐	N/A	☐	
13	Availability of single line diagram and PV modules layout in the cabin		OK	☐	NO	☐	N/A	☐	
Note:	1. …..								
	2……								
	3……								

4.1.2 Civil Works

The Inspections listed below will involve the concerned Authority (i.e. Dubai Municipality, Trakhees, etc.). A provisional description of the Inspection is given only to make the Applicant aware of the kind of checks that may be performed.

With reference to 100% of the installation, verify the compliance with the drawings and design documents regarding the quantity, type, sizing, installation and integrity of components and materials. The following checks shall be performed.

Civil works									
		Doc. ref.	Result						Ref. to Note
1	Foundations (state, breakage, deterioration of the surface)		OK	☐	NO	☐	N/A	☐	
2	Structural alignments: within the tolerances set by design		OK	☐	NO	☐	N/A	☐	
3	Placement of inserts and holes in foundations and precast		OK	☐	NO	☐	N/A	☐	
4	General conditions of the cabins and related foundations		OK	☐	NO	☐	N/A	☐	
5	Waterproofing of the cabins		OK	☐	NO	☐	N/A	☐	
6	Roof integrity and ingress protection (water proof) of mounting system to the roof		OK	☐	NO	☐	N/A	☐	
7	Access doors of the cabins		OK	☐	NO	☐	N/A	☐	
8	Ventilation grills / air conditioning of the cabins		OK	☐	NO	☐	N/A	☐	
9	Integrity and layout of cableways / conduits		OK	☐	NO	☐	N/A	☐	
Note:	1.								
	2.....								
	3.....								

4.1.3 Support Structures

The Inspections listed below will involve the concerned Authority (i.e. Dubai Municipality, Trakhees, etc.). A provisional description of the Inspection is given only to make the Applicant aware of the kind of checks that may be performed.

With reference to 100% of the installation, verify the compliance with the drawings and design documents regarding the quantity, type, sizing, installation and integrity of components and materials. The following checks shall be performed.

Support Structures									
		Doc. ref.	Result						Ref. to Note
1	Mounting of supporting structures and of fixation elements		OK	☐	NO	☐	N/A	☐	
2	Condition of the components (damages, defects, weld quality, loss of galvanic protection, corrosion)		OK	☐	NO	☐	N/A	☐	
3	Planarity of the PV modules supporting structures (arrows, sags)		OK	☐	NO	☐	N/A	☐	
4	Inclination of PV modules: within the tolerances set in the design		OK	☐	NO	☐	N/A	☐	
5	Bolts and tightening torque corresponding to design (sample check)		OK	☐	NO	☐	N/A	☐	
6	Support structures and fasteners are suitable to weather conditions and compatible with other materials to prevent corrosion		OK	☐	NO	☐	N/A	☐	
Note:	1.								
	2.....								
	3.....								

4.1.4 Photovoltaic Modules

With reference to 100% of the installation, verify the compliance with the drawings and design documents regarding the quantity, type, sizing, installation and integrity of components and materials. The following checks shall be performed.

Photovoltaic modules									
Visual inspection of PV modules		Doc. ref.	Result						Ref. to Note
1	Mechanical integrity of the modules (faults, breakdowns or incomplete assembly)		OK	☐	NO	☐	N/A	☐	
2	Integrity functional parts of the modules (delamination, discoloration, dirt, etc.)		OK	☐	NO	☐	N/A	☐	
3	Labeling of modules		OK	☐	NO	☐	N/A	☐	
4	Fixation system		OK	☐	NO	☐	N/A	☐	
5	Bolts and tightening torques corresponding to design (on a sample basis)		OK	☐	NO	☐	N/A	☐	
6	No growing trees or bushes shadow any PV module		OK	☐	NO	☐	N/A	☐	
Quality of cabling		Doc. ref.	Result						Ref. to Note
7	Tightening of cable glands		OK	☐	NO	☐	N/A	☐	
8	Correct installation of DC cables (clamps, sharp edges, folds too narrow, etc.).		OK	☐	NO	☐	N/A	☐	
9	Assembly and crimping of plug-in connectors		OK	☐	NO	☐	N/A	☐	
10	Plug-in connectors do not touch the ground or the roof surface		OK	☐	NO	☐	N/A	☐	
Note:	1.								
	2.....								
	3.....								

4.2 Inspections without interconnection

4.2.1 Electrical equipment

With reference to 100% of the installation, verify the compliance with the drawings and design documents regarding the quantity, type, sizing, installation and integrity of components and materials. The following checks shall be performed.

Electrical equipment									
		Doc. ref.	Result						Ref. to Note
1	Positioning and fixation of string combiner boxes for connection of PV strings		OK	☐	NO	☐	N/A	☐	
2	Installation of raceways and/or cable sheaths string		OK	☐	NO	☐	N/A	☐	
3	Positioning in the cabins of the equipment: inverters, transformers, switchgear, etc.		OK	☐	NO	☐	N/A	☐	
4	Mechanical integrity of the said equipment (e.g. faults, breaks)		OK	☐	NO	☐	N/A	☐	
5	Switch-disconnectors on DC side visible and reachable (all buildings, switch position according to design)		OK	☐	NO	☐	N/A	☐	
6	Emergency remote control (manual call point) to disconnect a portion of PV plant (ordinary and higher hazard buildings, min. eight 1.1 m above floor)		OK	☐	NO	☐	N/A	☐	
Note:	1.								
	2.....								
	3.....								

4.2.2 Protection of Assembled Components (IP degree)

With reference to 100% of the installation, check the fulfilment of the design prescriptions.

Protection of assembled components (IP degree) Check the fulfilment of the design prescriptions									
		Doc. ref.	Result						Ref. to Note
1	IP degree of equipment, string combiner boxes, etc.		OK	☐	NO	☐	N/A	☐	
2	Installation of equipment, string combiner boxes, etc.		OK	☐	NO	☐	N/A	☐	
3	Installation of cable glands and connectors related to the above equipment		OK	☐	NO	☐	N/A	☐	
4	Positioning of cable ducts / conduits on metallic cableways / ladders		OK	☐	NO	☐	N/A	☐	
5	Protective provisions against rodents (polyurethane foam to obstruct inlets of conduits and of cabins) and insects (anti-insect grilles)		OK	☐	NO	☐	N/A	☐	
6	Labeling of cables, cable ducts and equipment		OK	☐	NO	☐	N/A	☐	
Note:	1.								
	2.....								
	3.....								

4.2.3 String Combiner Boxes (DC string connections and AC auxiliary services)

With reference to a percentage of the installed plant, ranging between the 15% and the 20%, check compliance of labels (cables, terminal blocks, and connectors) with drawings and design documents. Check the cables are tightened in their respective terminals.

String combiner boxes (DC string connections and AC auxiliary services)									
		Doc. ref.	Result						Ref. to Note
1	Execution of wiring and cable labeling according to cable lists		OK	☐	NO	☐	N/A	☐	
2	The cross section area and the type of cables (UV resistant, waterproof, etc.) fully comply with the design documents		OK	☐	NO	☐	N/A	☐	
3	Cable loops executed with a minimum open area in order to reduce the risk of lightning induced voltage surges		OK	☐	NO	☐	N/A	☐	
4	Termination of DC cables and control cables (including AC auxiliary services if applicable) into their respective clamp terminals		OK	☐	NO	☐	N/A	☐	
5	Route of signal cables among the string combiner boxes		OK	☐	NO	☐	N/A	☐	
6	Quantity and characteristics of DC circuit breakers, disconnect switches, and protections. Check their functionality		OK	☐	NO	☐	N/A	☐	
7	Quantity and characteristics of surge arresters		OK	☐	NO	☐	N/A	☐	
8	Assembly and wiring of blocking diodes		OK	☐	NO	☐	N/A	☐	
Note:	1.								
	2.....								
	3.....								

4.2.4 Electrical Power Connections in Substations and Electrical Rooms

With reference to 100% of the installation, check compliance of labels (cables, terminal blocks, and connectors) with drawings and design documents. Check the cables are tightened in their respective terminals.

Electrical power connections in substations and electrical rooms									
		Doc. ref.	Result						Ref. to Note
1	Execution of wiring according to cable lists (sample check)		OK	☐	NO	☐	N/A	☐	
2	Labeling of trays and cables according to cable lists (sample check)		OK	☐	NO	☐	N/A	☐	
3	LV and MV switchgears: check termination of LV and MV cables and control that all cables are tightened into their respective clamp terminals		OK	☐	NO	☐	N/A	☐	
4	LV and MV switchgears: quantity and characteristics of breakers, isolators and protections. Check their functionality		OK	☐	NO	☐	N/A	☐	
5	Inverter connected according to design		OK	☐	NO	☐	N/A	☐	
6	Systems for air conditioning and/or ventilation according to design		OK	☐	NO	☐	N/A	☐	
7	Connection of switchgears according to design		OK	☐	NO	☐	N/A	☐	
8	Connection of LV / MV transformers according to design		OK	☐	NO	☐	N/A	☐	
Note:	1.								
	2.....								
	3.....								

4.2.5 Bonding and Earthing System

With reference to 100% of the installation, do the following checks.

Bonding and earthing system									
		Doc. ref.	Result						Ref. to Note
1	Earthing system of PV plant installed according to design; check bonding connections and connection to terminals of main existing earthing grid		OK	☐	NO	☐	N/A	☐	
2	Certification of correct execution / performance of main earthing grid (assess periodical verification tests of earth resistance according to local rules)		OK	☐	NO	☐	N/A	☐	
3	Connections to DEWA earthing network, if applicable		OK	☐	NO	☐	N/A	☐	
4	Earthing conductors terminate in the earthing busbar of the DRRG system		OK	☐	NO	☐	N/A	☐	
5	Earthing busbar is properly bonded with the local earthing of the site		OK	☐	NO	☐	N/A	☐	
6	Independent earth connection of main equipment to earthing busbar		OK	☐	NO	☐	N/A	☐	
7	Connection of earthing copper cables to aluminum structures via proper connectors (copper-aluminum, tin plated copper, stainless steel, ...) to prevent corrosion from dissimilar metals		OK	☐	NO	☐	N/A	☐	
Note:	1.								
	2.....								
	3.....								

4.2.6 Connections to earthing system of metal structures / equipment

With reference to 100% of the installation, check the connections to the terminals and the earthing grid.

Connections to earthing system of metal structures / equipment									
		Doc. ref.	Result						Ref. to Note
1	Installation and test of the electrical continuity of the grounding connections of metal support structures and other metal parts (at least two points of each support structure shall be connected to the earthing system)		OK	☐	NO	☐	N/A	☐	
2	The earthing conductors are connected to the pre-drilled holes of PV modules marked with an earthing sign and with lugs of a proper material to avoid corrosion.		OK	☐	NO	☐	N/A	☐	
3	Test of the electrical continuity of the PV modules frames (if any) with the supporting structure or installation and test of bonding and earthing conductors on PV modules frames		OK	☐	NO	☐	N/A	☐	
4	In case of bonding and earthing conductors on PV modules frames the removal of any PV module(s) does not compromise the continuity of the grounding system		OK	☐	NO	☐	N/A	☐	
5	Installation and test of the electrical continuity of the grounding connections of surge arresters		OK	☐	NO	☐	N/A	☐	
6	Installation and test of the electrical continuity of the grounding connections of equipment and switchgear in the cabins		OK	☐	NO	☐	N/A	☐	
7	Installation of the grounding connection of MV cable shields		OK	☐	NO	☐	N/A	☐	
8	Installation or revision of the Lightning protection system (LPS) according to detailed design		OK	☐	NO	☐	N/A	☐	
Note:	1.								
	2.....								
	3.....								

4.3 Tests without interconnection

4.3.1 Insulation of LV connections DC and AC

The measurements are collected in Annex 1

Insulation test – Summary of test results Protection devices and electronic equipment that might be affected by the test voltage shall be disconnected during the performance of the measures.										
		Doc. ref.	Result							Ref. to Note
1	Test insulation of DC circuits, including clamps and terminals (max. 1000 VDC for 1 min.)		OK	☐	NO	☐	N/A	☐		
2	Check Insulation resistance of DC circuits higher than 1 MΩ (including clamps and terminals). Check Insulation resistance of PV strings higher than 5 MΩ (2 MΩ in the case of moisture on PV modules)		OK	☐	NO	☐	N/A	☐		
3	Test insulation of AC circuits, including clamps and terminals (max. 1000 VDC for 1 min.)		OK	☐	NO	☐				
4	Check insulation resistance is higher than 1 MΩ for DC circuits including clamps and terminals		OK	☐	NO	☐	N/A	☐		
Note:	1. …..									
	2……									
	3……									

4.3.2 Measurements on PV strings

The measurements are collected in Annex 2

Measurements on PV strings – Summary of test results Protection devices and electronic equipment that might be affected by the test voltage shall be disconnected during the performance of the measures.									
		Doc. ref.	Result						Ref. to Note
1	Measure each single string voltage VOC (inverter switched off)		OK	☐	NO	☐	N/A	☐	
2	Measure each single string current ISC (inverter switched off)		OK	☐	NO	☐	N/A	☐	
3	Insulation test between short-circuited array and earth. Limit value of insulation resistance for acceptance of each string: 5 MΩ in dry conditions (2MΩ in wet conditions)		OK	☐	NO	☐	N/A	☐	
Note:	1. …..								
	2……								
	3……								

4.3.3 Calibration of protections (Interface Protection)

The Interface Protection(s) usually comes with predefined settings from factory. However it is required that settings are checked on-site, if necessary the said settings shall be adjusted.

Calibration of protections (Interface Protection)									
		Doc. ref.	Result						Ref. to Note
1	Adjust – if required – the thresholds of equipment and protective devices		OK	☐	NO	☐	N/A	☐	
2	Check the settings and the correct intervention of the Interface Protection(s) through simulated tests by means of the equipment described in [1] D.2.5.		OK	☐	NO	☐	N/A	☐	
			OK	☐	NO	☐	N/A	☐	
			OK	☐	NO	☐	N/A	☐	
			OK	☐	NO	☐	N/A	☐	
			OK	☐	NO	☐	N/A	☐	
			OK	☐	NO	☐	N/A	☐	
			OK	☐	NO	☐	N/A	☐	
			OK	☐	NO	☐	N/A	☐	
Note:	1.								
	2.....								
	3.....								

ANNEX 1 – INSULATION TESTS

Operational note	
1.	Test performed between each cable positive or negative and earth, test voltage maximum 1000Vdc for 1 minute.
2.	Insulation resistance for acceptance of test result 1 MΩ.
3.	Insulation tests can be done also on short-circuited string as mentioned in ANNEX 2.

Insulation tests								
Cable ID	Connection (from / to)	Test time [hh:mm]	Insulation resistance [Mohm]	Test result				Ref. Note
				OK	☐	NO	☐	
				OK	☐	NO	☐	
				OK	☐	NO	☐	
				OK	☐	NO	☐	
				OK	☐	NO	☐	
				OK	☐	NO	☐	
				OK	☐	NO	☐	
				OK	☐	NO	☐	
				OK	☐	NO	☐	
				OK	☐	NO	☐	
				OK	☐	NO	☐	
				OK	☐	NO	☐	
				OK	☐	NO	☐	
				OK	☐	NO	☐	
Note:								

ANNEX 2 – TESTS ON PV STRINGS

PV string open circuit voltage measurements

Operational notes (See Figure 1 in Annex 2)	
1.	Solar irradiance ≥ 600 W/m2 on PV module surface
2.	String voltage measured in open circuit, inverter switched off.
3.	Measure strings connected in parallel (e.g. to same combiner box) so that possible changes of solar radiation are minimized.
4.	For strings connected in parallel (e.g. to same combiner box) evaluate percentage difference of each measure from average (Voc_ave_strings).
5.	Check strings that show differences larger than ± 5%.

PV string short-circuit current measurements

Operational notes (See Figure 2 in Annex 2)	
1.	Solar irradiance ≥ 600 W/m2 on PV module surface
2.	Measure short-circuited strings, downstream e.g. the DC disconnect of combiner box, inverter switched off.
3.	Test each single short-circuited string, other strings in open. Before each new test open the DC disconnect, disconnect the last tested string and connect the following string to be tested. Finally close the DC disconnect, and test.
4.	Measure strings connected in parallel (e.g. to same combiner box) so that possible changes of solar radiation are minimized.
5.	For strings connected in parallel (e.g. to same combiner box) evaluate percentage difference of each measure from average (Voc_ave_strings).
6.	Check strings that show differences larger than ± 5%.
NOTE: In case of DC disconnector embedded in the inverter, an external circuit shall be used. The safe connection/ disconnection between (+) and (-) poles is thus made by means of a proper switch-disconnector	

Test insulation between earth and short-circuited strings

Operational notes	
1.	Measure short-circuited strings, downstream e.g. the DC disconnect of combiner box, inverter switched off.
2.	Test each single short-circuited string, other strings in open. Apply the test voltage maximum 1000Vdc for 1 minute between earth and short-circuited string. Before each new test open the DC disconnect, disconnect the last tested string and connect the following string to be tested. Finally close the DC disconnect, and test.
3.	Surge protective devices shall be disconnected before testing.
4.	Insulation resistance for acceptance of test result 5 MΩ in dry conditions (2 MΩ in wet conditions).

Report of detailed test results

VOC, ISC, Insulation resistance (1 of xx)							
Combiner Box	Start Time	Stop Time	Start Time	Stop Time	Start Time	Stop Time	
String	Voltage		Current		Insulation resistance		
	VOC [V]	Difference between VOC_ ave [%]	ISC [A]	Difference between ISC_ ave [%]	[MΩ]	Resistance test result	
1						OK	☐
2						OK	☐
3						OK	☐
4						OK	☐
5						OK	☐
6						OK	☐
7						OK	☐
8						OK	☐
9						OK	☐
10						OK	☐
11						OK	☐
12						OK	☐
13						OK	☐
14						OK	☐
15							
16							
VOC_ave [V]		Itot_strings					
		ISC_ave [A]					
Note:							

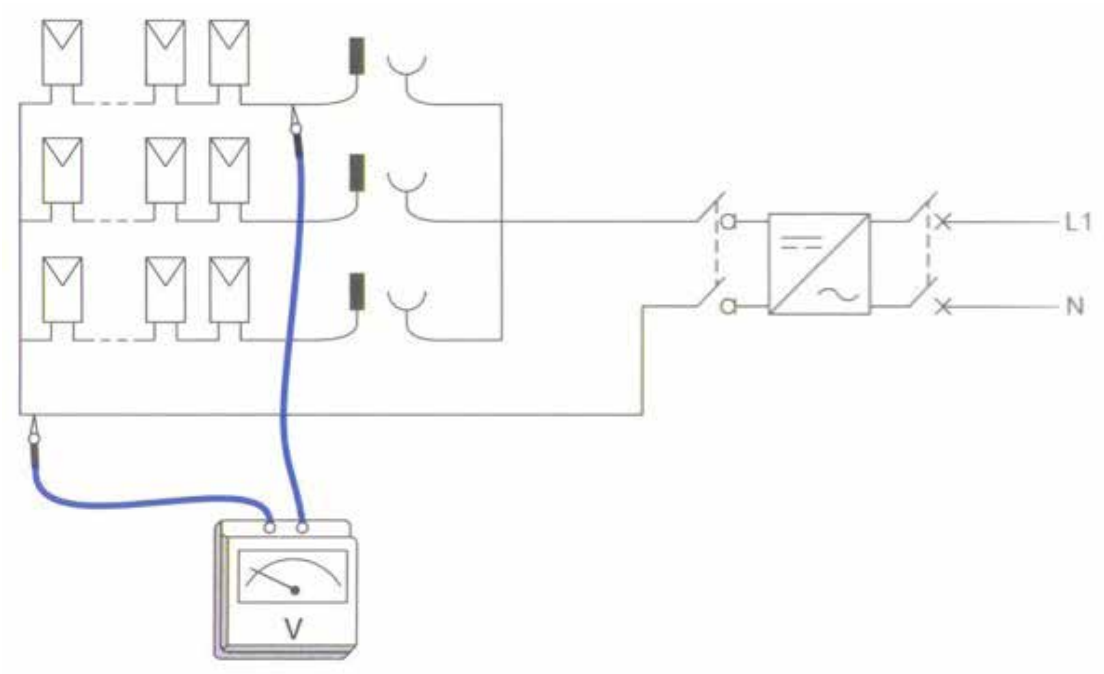

Figure 1 – Measurement of the open-circuit voltage of a string

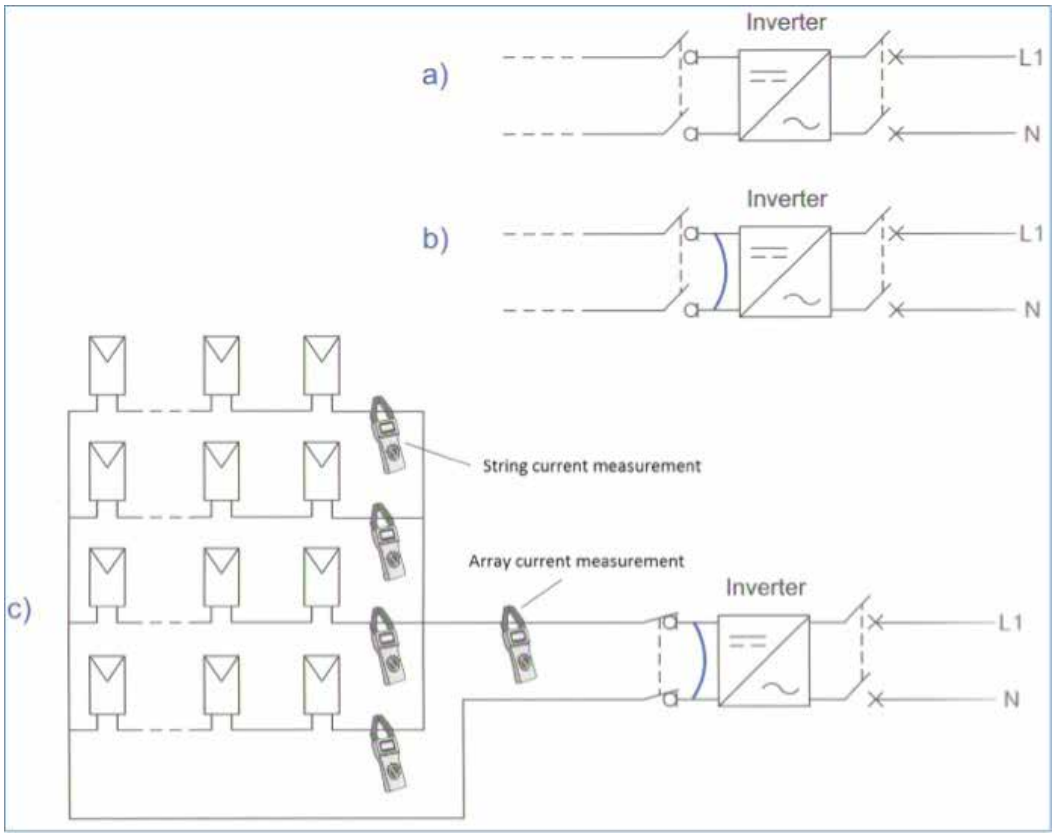

a) Circuit-break the inverter upstream and downstream
b) Short-circuit the terminals not powered of the circuit-breaker upstream the inverter
c) Close the circuit-breaker upstream the inverter and measure the current by means of a DC current clamp

Figure 2 – Procedure for the measurements of the current of strings and array: